GEBERIT

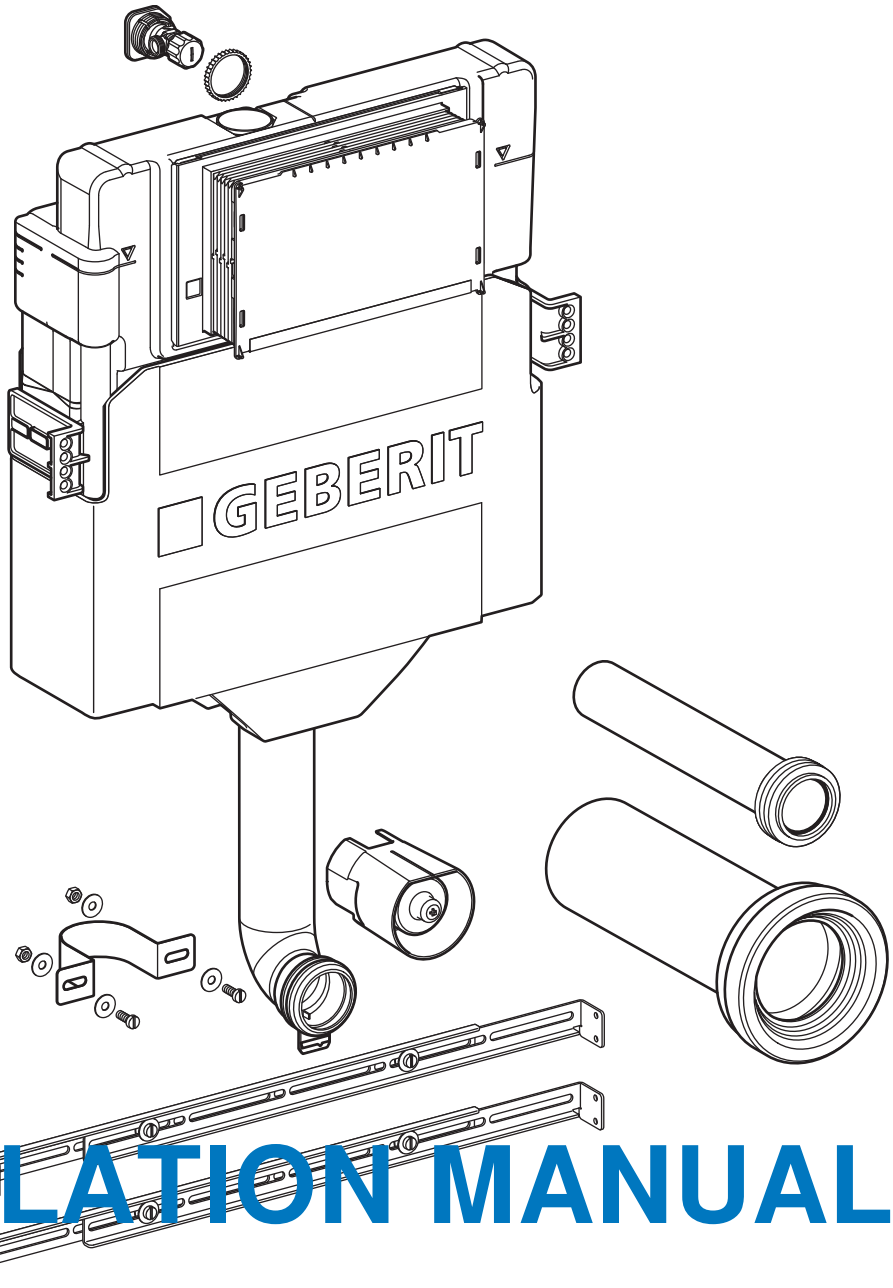

INSTALLATION MANUAL

MONTAGEANLEITUNG
INSTRUCTIONS DE MONTAGE
ISTRUZIONI PER IL MONTAGGIO

KNOW
HOW
INSTALLED

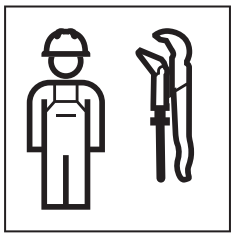

972.590.00.0(01)

Water quality

ATTENTION

Damage to device from aggressive disinfectants

Do NOT insert any tablets, fluids, gels or additives containing chlorine, as this substance will corrode/damage cistern parts and VOID WARRANTY. Only potable water with <= 4 ppm chlorine concentration in water allowed, including whole house (centralized) water treatments.

Water temperature

ATTENTION

Damage to device from unacceptable water temperature

The water temperature in the cistern must always remain between 0.5 °C [33 °F] and 25.0 °C [77 °F] to avoid freezing and condensation that can cause damage to the product and/or property damage.

Product Specifications

Geberit Model No. / Flush volume:
- **109.304.00.5** / 1.6/0.8 gpf (6.0/3.0 lpf)
- **109.307.00.5** / 1.28/0.8 gpf (4.8/3.0 lpf)

Concealed tank for floor-standing WC and actuator plate.

Water supply connection 1/2 copper, minimum water pressure 35 PSI.

For Geberit actuator plates Sigma.

To achieve the specified flush volume, the wash-down WC for single or dual flush form a third-party supplier must be ANSI-listed.

Approved for use in the US and Canada (cUPC®)

Properties

- Shockproof concealed tank, fully insulated against condensation, made of high-density polyethylene (HDPE)
- Backflow-preventing fill valve

Warranty

Limited lifetime warranty on tank and carrier.
10 year warranty on fill valve and flush valve.

Material Determination

Recommended material for wall surface construction:
- Gypsum / green board
- Cement board
- Tile backer board
- Ceramic tile board

Minimum covering thickness 3/8″ (10 mm).

Maintenance recommendations

Geberit recommends conducting biennial inspections of cistern internal components including supply stop (angle valve), supply hose, filling (float) valve and flushing valve.
- ENSURE moving parts are free to move without binding or misalignment.
- TIGHTEN any water connections that feel loose.
- REPLACE supply hose if it shows any signs of wear of discoloration of the external braiding.
- CLEAN or REPLACE flush valve seal if it shows any signs wear, discoloration, or other damage.

9007213811267723 © 09-2025
972.590.00.0(01)

in

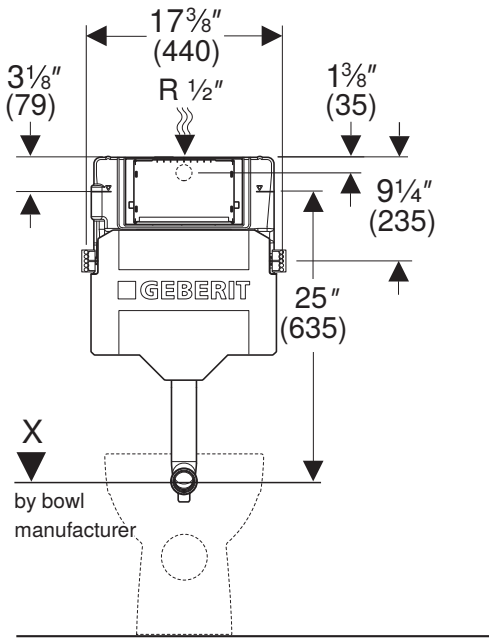

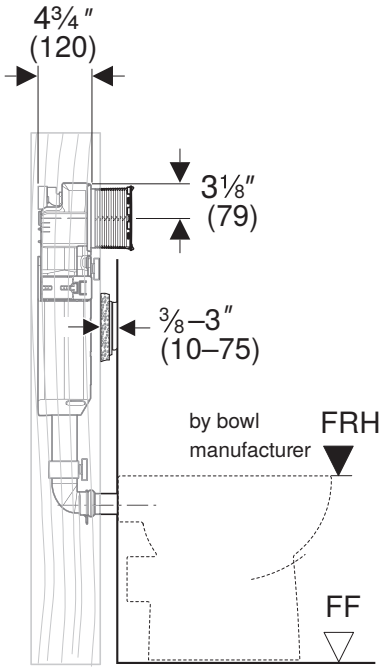

Connection of waste outlet to drain pipe

Supplied fitting is HDPE and cannot be glued.
Note: Supplied coupling connects to 3″ plastic drainge pipes only.To connect supplied waste bend to other materials, purchase alternate coupling, with one end for 3″ plastic.

Finished rim height

Determine FRH for the floor-standing WC and adjust the height of the concealed tank in accordance with the dimensions of the WC ceramic. The height of the floor construction must also be observed.

1

✓

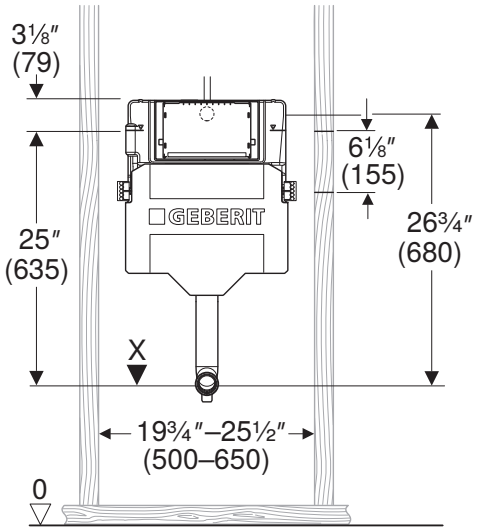

1

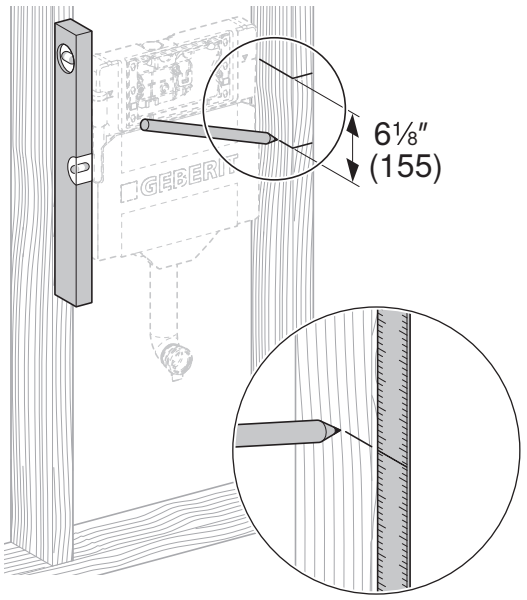

2

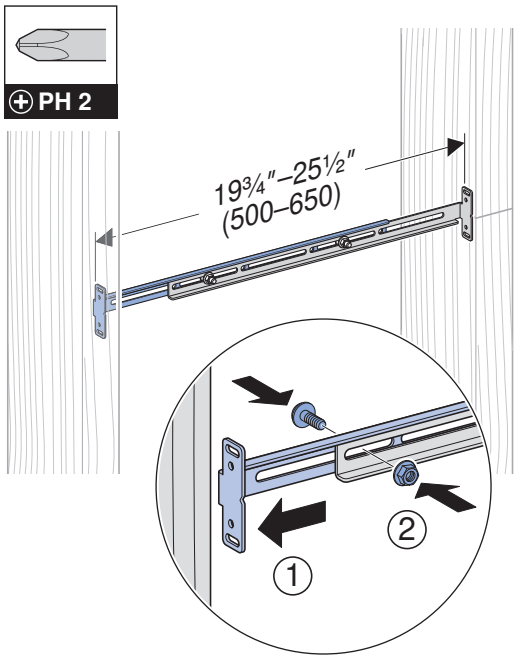

3

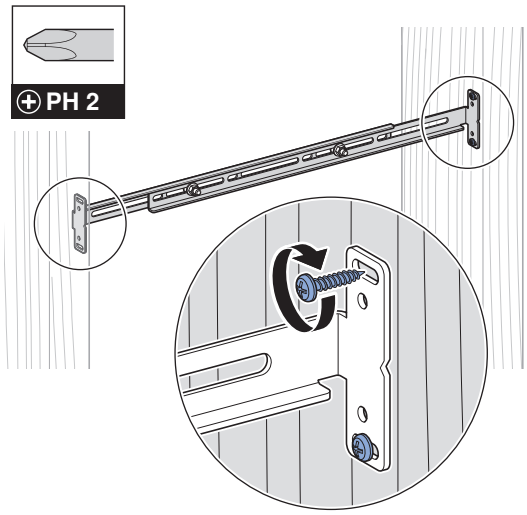

4

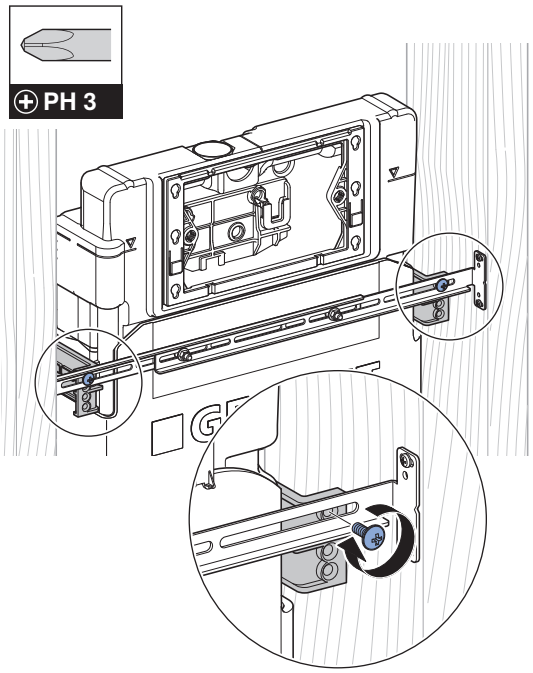

5

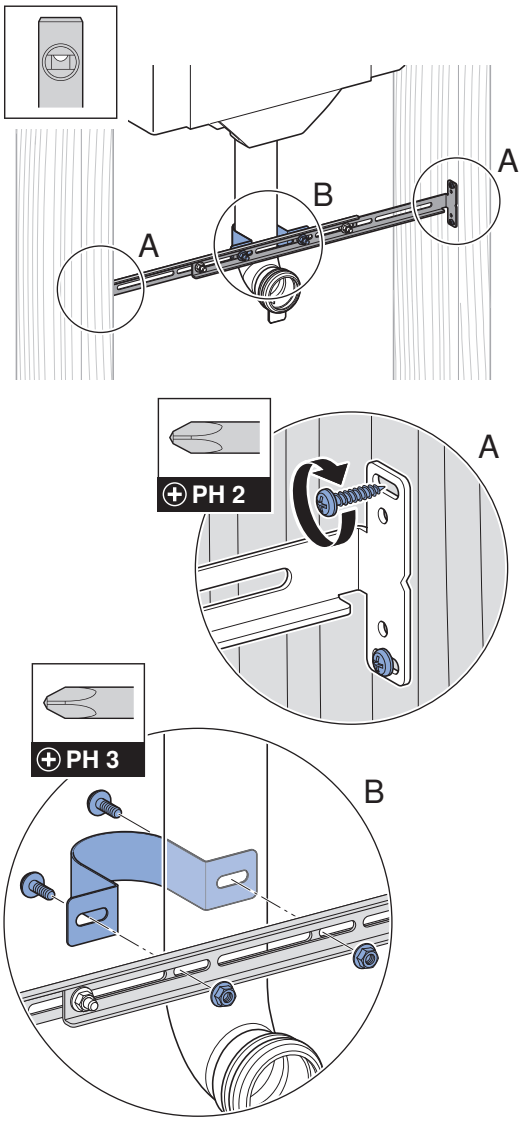

9007213811267723 © 09-2025
972.590.00.0(01)

2

1

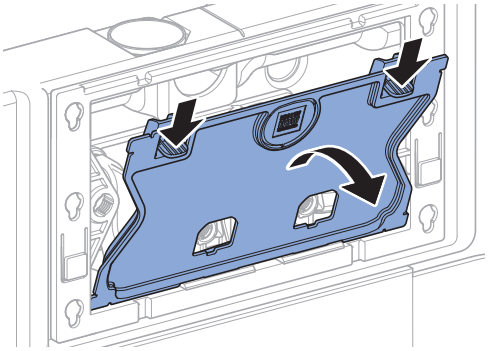

2

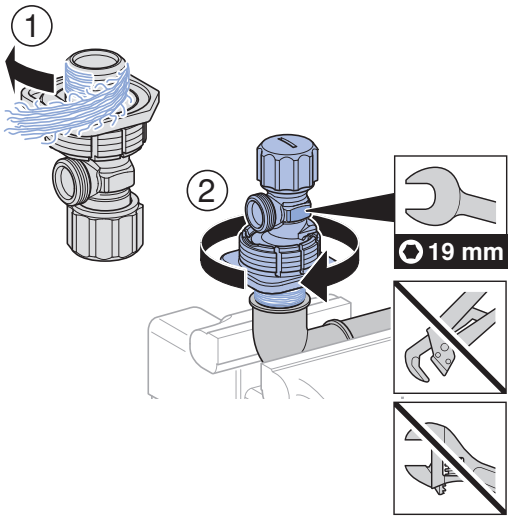

3

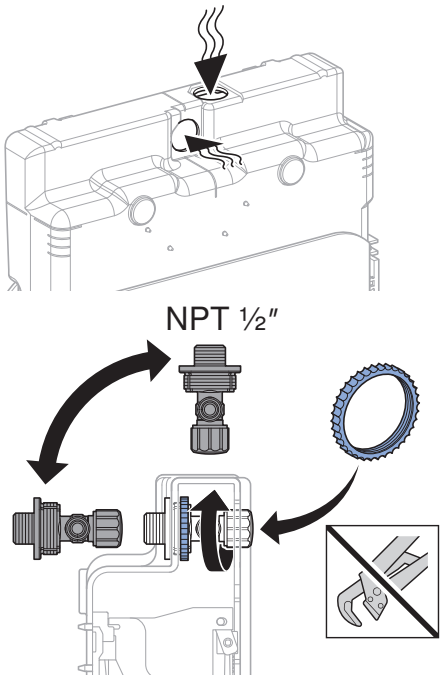

4

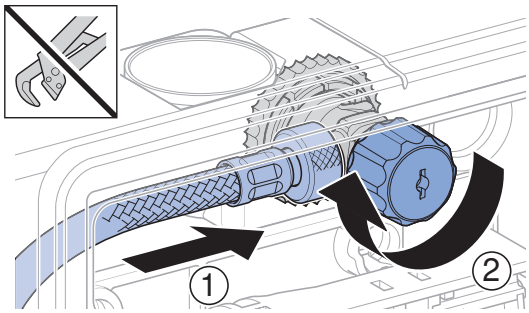

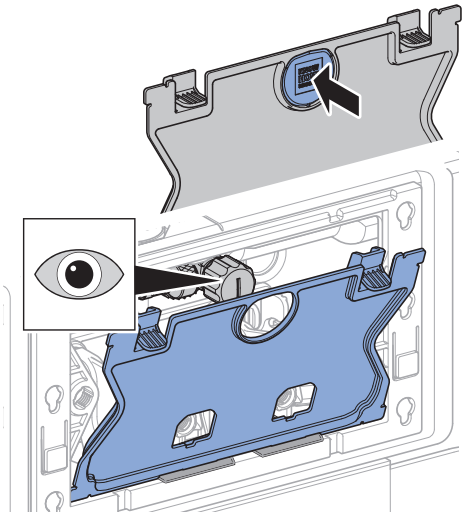

5

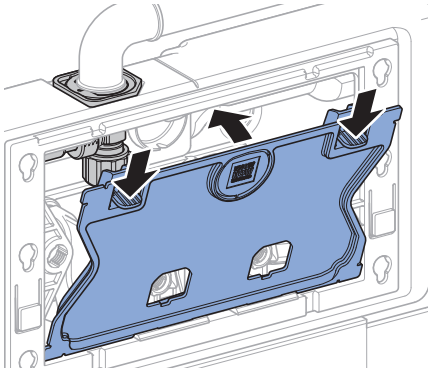

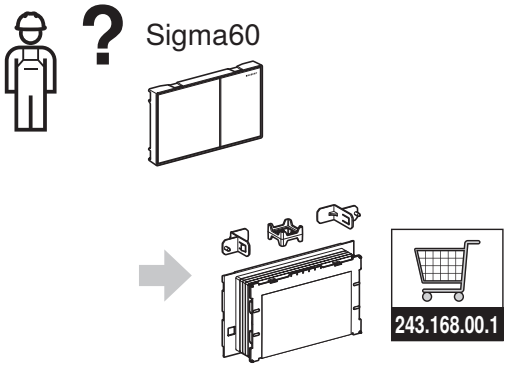

6

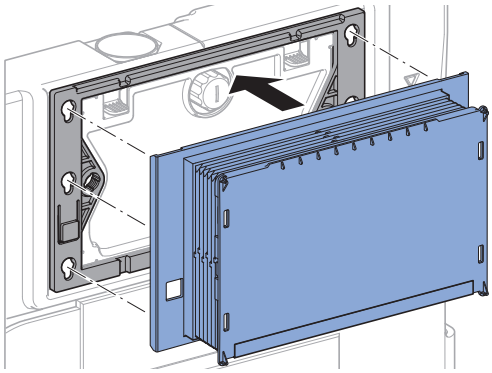

7

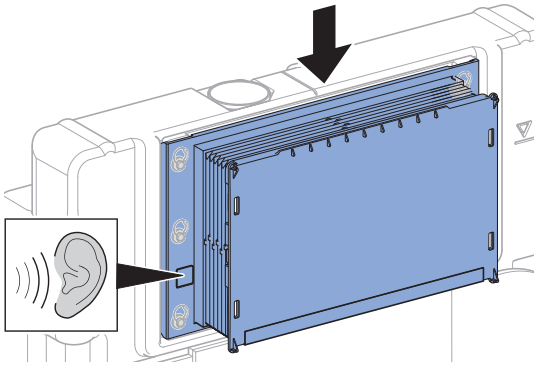

3

1

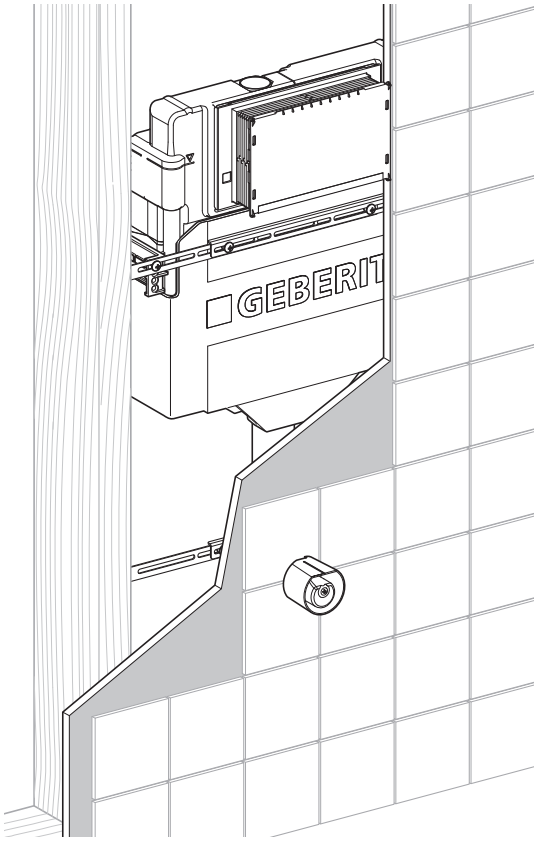

2

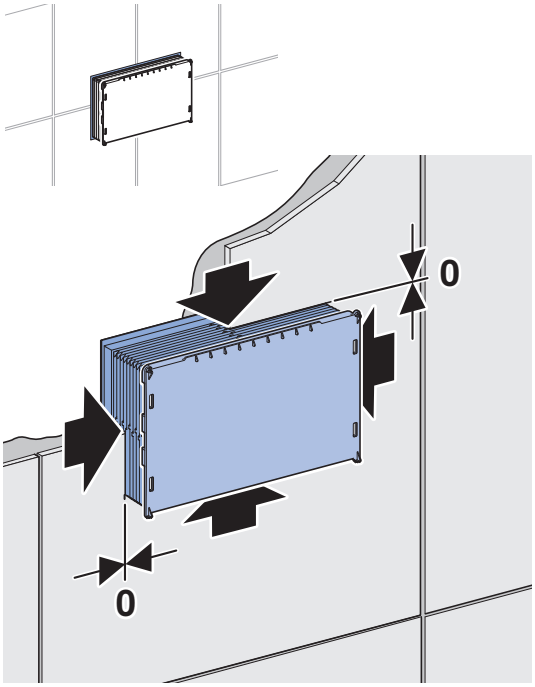

9007213811267723 © 09-2025
972.590.00.0(01)

Geberit
2100 South Clearwater Drive
Des Plaines, IL 60018 US
Phone: 847/803-5000
Fax: 847/803-5454
Technical: 800/832-8783
www.geberit.us

9007213811267723 © 09-2025
972.590.00.0(01)